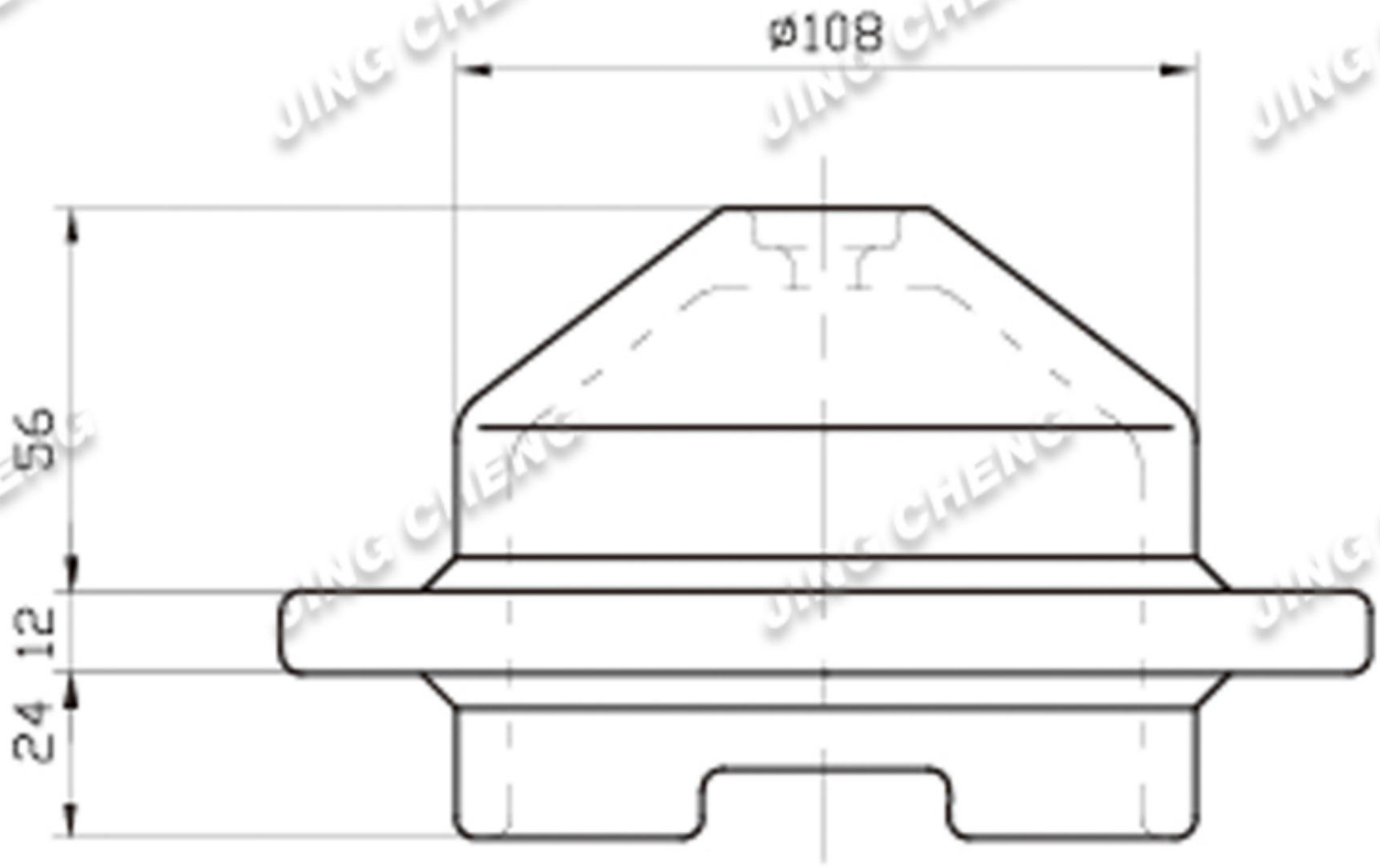

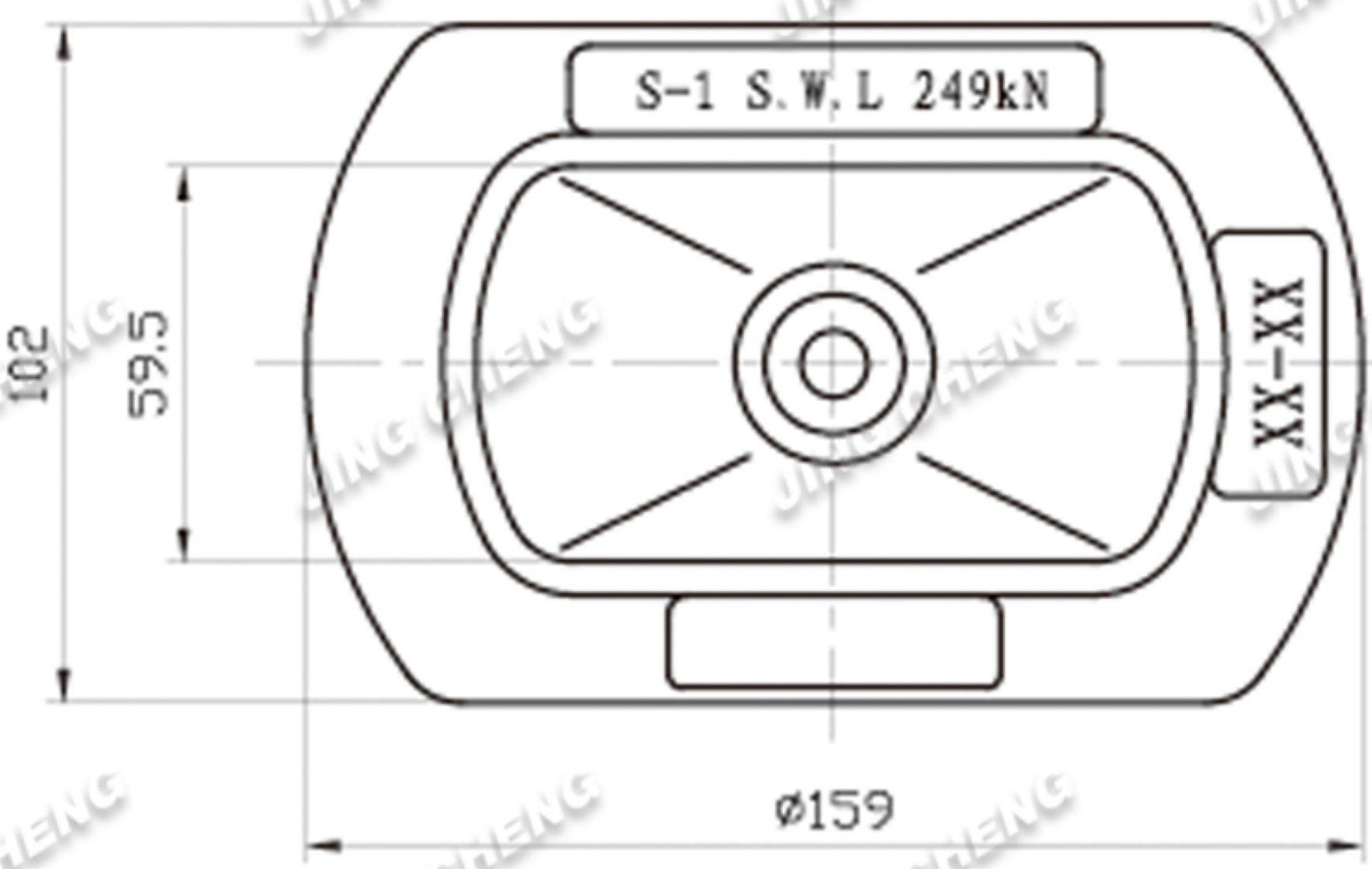

STRENGTH:	S.W.L	P.L	B.L
(Tension)	21Ton	31.5Ton	42Ton

FINISH: HOT DIP GALVANIZED.

WEIGHT: 2.4kg

Copyright@2022 Qingdao Jingcheng Forging Co., Ltd
All rights reserved www.qdjcforging.com sales01@qdjcforging.com